VOZROZHDENIE LLC

OKPD 2 26.30.50.110

TU 27.90.40-001-33120038-2018

APPROVED BY

VZR.245500.010LU

TURNSTILE

MODELPRAKTIKA QL-05

QL-05-SM-660, QL-05-SM-900, QL-05-SMK-660, QL-05-SMK-900, QL-05-SMR-660, QL-05-SMR-900, QL-05-SMRK-660, QL-05-SMRK-900,

QL-05-CM-660, QL-05-CM-900, QL-05-CMK-660, QL-05-CMK-900, QL-05-CMR-660, QL-05-CMR-900, QL-05-CMRK-660, QL-05-CMRK-900,

QL-05-GCM-660/900, QL-05-GCMR-660/900

VZR.245500.010OM

OPERATION MANUAL

44 sheets

2019

CONTENTS

This Operation Manual (OM) applies to Turnstile Oxgard Praktika QL-05 and its modifications (hereinafter referred to as the product). Product firmware version:

FW v1.2

1) Software version for turnstile with 660mm flaps – FW v2.6;
2) Software version for turnstile with 900mm flaps – FW v2.7.

The manufacturer reserves the right to change configuration, technical characteristics and appearance of the product without further notice

Before using the product, please read VZR.245500.010 Logbook (LB) as well.

This OM is a document certifying the product's basic parameters and characteristics guaranteed by the manufacturer.

The Operation Manual is intended to instruct the user on the principle of operation, structure of the product to correctly operate the product, fully utilize its technical capabilities and maintain its constant readiness for operation.

1 DESCRIPTION AND OPERATION

1.1 Product description and operation

1.1.1 Turnstile Oxgard Praktika QL-05 is designed to control access and manage people traffic.

The product can be used at checkpoints of enterprises, organizations and banks, in educational institutions, sports and entertainment facilities, shops, terminal stations and other institutions.

To ensure convenient and fast passage of people, it is recommended to install one product per 500 people working during one shift.

1.1.2 The structural components of the product are detailed in Table 1.

Table 1 – Product components

Product designation	Product name	Quantity	Note
Turnstile	Praktika QL-05	1	2 outermost modules (left/ right) Appendix B
Control panel (CP)	Praktika control panel	1	
Power supply source*		2	
Reader for PC*		2	
Card collector*		1	
Diagram*	Module layout diagram	1	

Note - Product components marked with (*) are optional. Recommended power supply units MEAN WELL DR-120-12, MEAN WELL EDR-120-12.

Individual features of the product's modifications:

1) Praktika QL-05-SM-660 - outermost module, passage width - 660 mm;

2) Praktika QL-05-SM-900 - outermost module, passage width - 900 mm;

3) Praktika QL-05-SMK-660 - outermost module, card collector, passage width - 660 mm;

4) Praktika QL-05-SMK-900 - outermost module, card collector, passage width - 900 mm;

5) Praktika QL-05-SMR-660 - outermost module, reader, passage width - 660 mm;

6) Praktika QL-05-SMR-900 - outermost module, reader, passage width - 900 mm;

7) Praktika QL-05-SMRK-660 - outermost module, reader, card collector, passage width - 660 mm;

8) Praktika QL-05-SMRK-900 - outermost module, reader, card collector, passage width - 900 mm;

9) Praktika QL-05-CM-660 - central module, passage width - 660 mm;

10) Praktika QL-05-CM-900 - central module, passage width - 900 mm;

11) Praktika QL-05-CMK-660 - central module, card collector, passage width - 660 mm;

12) Praktika QL-05-CMK-900 - central module, card collector, passage width - 900 mm;

13) Praktika QL-05-CMR-660 - central module, reader, passage width - 660 mm;

14) Praktika QL-05-CMR-900 - central module, reader, passage width - 900 mm;

15) Praktika QL-05-CMRK-660 - central module, reader, card collector, passage width - 660 mm;

16) Praktika QL-05-CMRK-900 - central module, reader, card collector, passage width - 900 mm;

17) Praktika QL-05-GCM-660/900 - central module, hybrid flaps, passage width - 660/900 mm;

18) Praktika QL-05-GCM-660/900 - central module, reader, hybrid flaps, passage width - 660/900 mm;

Note - The turnstile can work only in single-one mode, but with the help of outermost (one-way) and central (two-way) modules, unlimited number of passes can be arranged according to customer's requirements.

1.1.3 The product specifications are given in Tables 2 and 3.

Table 2 – Product specifications

Parameter	Value
Supply voltage (direct current), V: - nominal - working	 12 10.8...15.0
Average current in standby mode*, A	0.7
Average current in passage mode*, A	5.0
Maximum consumed current per module*, A	7.5
Temperature range, °C: - operation - transportation and storage	 +1...+40 +1...+40
Relative humidity, %	80
Throughput rate, per/min	30
Card collector capacity (optional), pcs.	50
Maximum number of connected control panels, pcs.	2
Service life, years	8

Note - * Values of current are given for nominal supply voltage; 2 modules and 2 12V 10A power supply units are required to form a single passageway zone.

Table 3 – Overall dimensions and weight of the product modules

Parameter	Value
Overall dimensions (H×W×E) of one outermost module with open flap, mm	1040×1320×205
Overall dimensions (H×W×E) of one central module with open flaps, mm	1040×1320×205
Overall dimensions (H×W×E) of one outermost module depending on the passage width, mm - 660 - 900	 1040×1320×510 1040×1320×630
Overall dimensions (H×W×E) of one central module depending on the passage width, mm - 660 - 900	 1040×1320×815 1040×1320×1055
Weight of one outermost module depending on the passage width, kg - 660 - 900	 90.0 93.0
Weight of one central module depending on the passage width, kg - 660 - 900	 106.0 112.0

1.1.4 Electrical characteristics of the card collector** are given in Table 4.

Table 4 – Electrical characteristics of the card collector

Parameter	Value
Supply voltage (direct current), V: - nominal - working	 12.0 8.0...18.0
Average current in standby mode*, A	0.2
Maximum consumed current*, A	1.5

Note - * Values of current are given for nominal supply voltage;

**option

1.1.5 Product structure.

The turnstile body is made of polished stainless steel. Barrier flaps are made of tempered glass. The turnstile can include an integrated card collector.

In the lower part of the modules, base covers (Figure 1 – 3) are provided for access to the feed-through holes for PSU, CP and ACS cables.

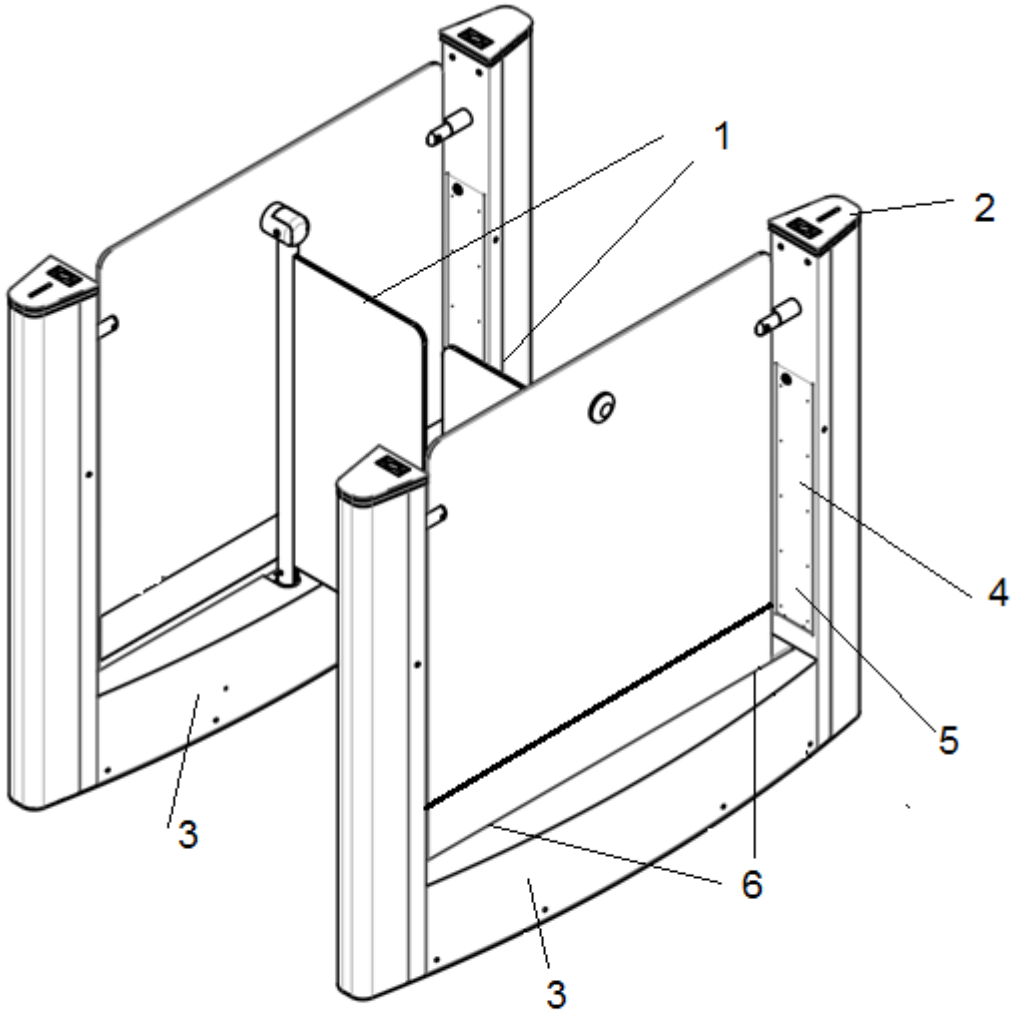

1-flaps; 2 - stands with background light; 3 - indication cover;
4 - card collector container; 5 - de-locking opening behind container;
6 - background light strip

Figure 1 – General view of the turnstile

1.1.6 Indication system

The turnstile indication system consists of a line of blue LEDs in the form of a background light strip at the module bottom and LED strip in the turnstile stands.

The LED strips in the stands indicate current state of the turnstile.

If there is a two-way module in the passageway, upper part of the turnstile stand is divided into two halves. One half of indication strip shows state of turnstile on one side of two-way module, and another half shows state of turnstile on another side.

1.1.7 Marking contains manufacturer's trademark, designation, and serial number.

1.1.8 Overall dimensions of the packaging container are:

1) Height 1280 mm;
2) Width 800 mm;
3) Length 1650 mm.

1.2 Description and operation of Oxgard Praktika control panel

Universal Oxgard Praktika control panel is designed for controlling Oxgard turnstiles.

1.2.1 Housing is made of stainless steel, control buttons and LEDs of operating mode indicators are located on the front side. Specifications are given in Table 5.

Table 5 – Product specifications

Parameter	Value
Overall dimensions (HxWxL)	25x107x107
Weight, kg	0.5
Temperature range, °C: - operation - transportation and storage	 +1...+40 +1...+40
Air relative humidity, %, not more than	80
Service life, years	8
Supply voltage (direct current), V: - nominal - working	 12.0 7.5...15.0

1.2.2 Design features:

1) Possibility to connect two control panels to one turnstile;

2) High noise immunity;

3) Length of the wire from control panel to the turnstile can reach up to several kilometers without losing the speed of transmission of commands;

4) Standard length of cable included in the package is 5 meters.

1.3 Description and operation of the card collector

1.3.1 Purpose of the card collector

The card collector is designed to collect and store contactless access cards at the facility exit. The flexible logic of operation and connection of the card

collector controller allows integrating the collector into any access control systems.

1.3.2 Description of structural elements. Figure 2 – General view of the card collector stand.

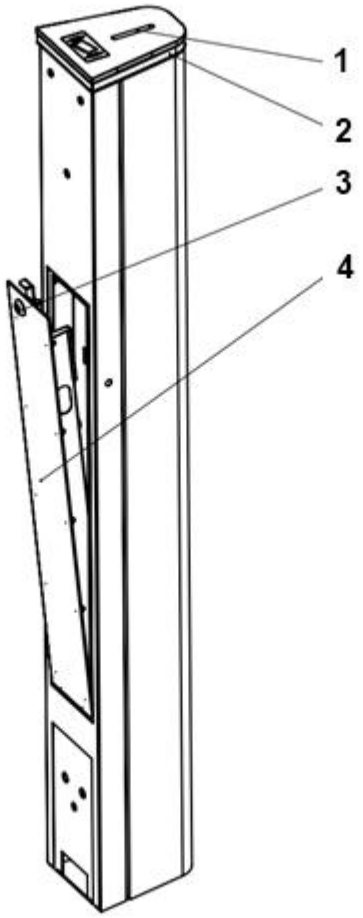

1 - slot for card; 2 – stand; 3 - container lock;
4 - card collector container

Figure 2 – General view of the card collector stand

The turnstile stand includes a collecting container which can store 50 cards. The container is located in the back part of the card collector housing and is equipped with a lock for quick access to withdrawn cards. Figure 3 – Removing top cover of the card collector.

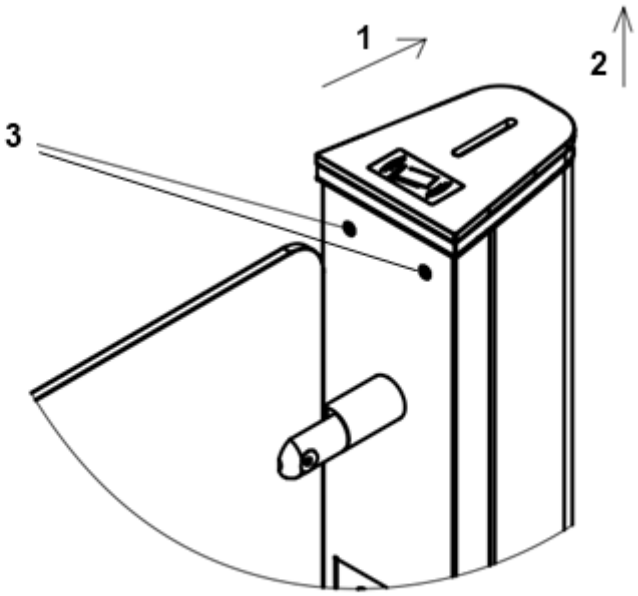

1, 2 - cover movement direction; 3 - fasteners of card collector cover

Figure 3 – Removing top cover of the card collector

ATTENTION: CONTACTLESS ACCESS CARD READER **IS NOT SUPPLIED** WITH THE CARD COLLECTOR. IT IS POSSIBLE TO INSTALL TWO TYPES OF READERS: PROX13 ИЛИ PROX125. CUSTOMER SELECTS APPROPRIATE READER FOR ITS SYSTEM.

1.3.3 Removal guest card from the collector:

1) Open the lock of the card collector container with a key.
2) Turn over container and pour accumulated cards into the card collection bag.
3) Insert the container into place and lock it with a key.

2 INTENDED USE

2.1 Operating limits

ATTENTION: FAILURE TO COMPLY WITH THE SAFETY REQUIREMENTS SPECIFIED IN THIS SECTION CAN RESULT IN DEATH AND DAMAGE TO HEALTH, COMPLETE OR PARTIAL LOSS OF PERFORMANCE OF THE PRODUCT AND/OR AUXILIARY EQUIPMENT.

ATTENTION: THE TURNSTILE SHOULD BE INSTALLED BY QUALIFIED SPECIALISTS ACCORDING TO THE INSTALLATION MANUAL

ATTENTION: MANUFACTURER WAIVES ANY RESPONSIBILITY FOR DEATH AND DAMAGE TO HEALTH, COMPLETE OR PARTIAL LOSS OF PERFORMANCE OF THE PRODUCT AND/OR AUXILIARY EQUIPMENT IF USER FAILS TO COMPLY WITH THE SAFETY REQUIREMENTS SPECIFIED IN THIS SECTION, AND ALSO VOIDS THE PRODUCT WARRANTY.

ATTENTION: SPECIAL INSTRUCTIONS FOR USING THE TURNSTILE:

1) PASSAGEWAY SENSORS ARE INSTALLED IN THE TURNSTILE COLUMNS AT A HEIGHT OF 720 MM.

HOWEVER, CHILDREN OF HEIGHT LESS THAT 720 MM MAY NOT BE DETECTED BY THE TURNSTILE.

CHILDREN, WHEN PASSING THROUGH THE TURNSTILE, **SHOULD BE ACCOMPANIED BY ADULTS RESPONSIBLE FOR THEM!!!**

LUGGAGE, VARIOUS CARTS AND SUITCASES MAY EITHER NOT BE DETECTED BY THE TURNSTILE.

2) IF THERE IS NO DISTANCE BETWEEN TWO USERS WHEN PASSING, THEY CAN BE RECOGNIZED AS ONE PERSON.

DO NOT:

INSTALL THE POWER SUPPLY UNIT INSIDE THE PRODUCT AS IT MAY CAUSE ELECTRIC SHOCK TO PEOPLE.

INSTALL THE PRODUCT OUTSIDE DRY AND HEATED ROOMS.

PREVENT OR ACCELERATE MOVEMENT OF THE TURNSTILE FLAPS.

APPLY PASTES AND LIQUIDS CHEMICALLY AGGRESSIVE TO MATERIALS OF THE HOUSING WHEN CLEANING THE PRODUCT.

2.2 Preparing the product for use

2.2.1 Safety measures during product preparation

ATTENTION: TO AVOID INJURIES AND BLOCKING OF THE TURNSTILE, BEFORE CONNECTING THE TURNSTILE, CLEAR FLAP ROTATION AREA FROM PEOPLE AND FOREIGN OBJECTS.

2.2.2 Rules and procedures for visual inspection of the product.

Visual inspection of the product before connecting it to the mains should be obligatory and include:

1) Check for absence of mechanical damage to the product housing: cracks, through holes from dropped out fasteners;

2) thorough inspection of all connections of the product.

2.2.3 Turning on the product.

Connect PSU to ~220 volts mains and turn it on. The barrier flaps of the turnstile will move to their initial position, indication band under the side glasses will go red, and the stand indication will go red too.

Permanent card readers (located on the turnstile stands) will light up in a static red color, this indicates that the readers are ready to identify user's card.

The turnstile is ready to work.

2.2.4 Control panel settings

Figure 4 – CP appearance. The product can be installed in different ways relative to the user. In some cases, it is necessary to swap left/right passage buttons. This can be done using the following operations:

1) Turn on power;

2) Press and hold **LEFT** (1) and **RIGHT** (3) buttons until LEDs on **LEFT** (1) and RIGHT (3) buttons blink.

3) Press and release **STOP** button (2).

4) Press and release **LEFT** button (1).

Now when LEFT button is pressed, it will be allowed to pass to the right and vice versa. Current button assignment is stored and not reset when the power

is turned off. To return to the initial setting, it is necessary to repeat the above sequence of actions.

Figure 4 – Control buttons 1 (LEFT), 2 (STOP), 3 (RIGHT), 4 (ANTI-PANIC) and LED indicators of the product's operating mode.

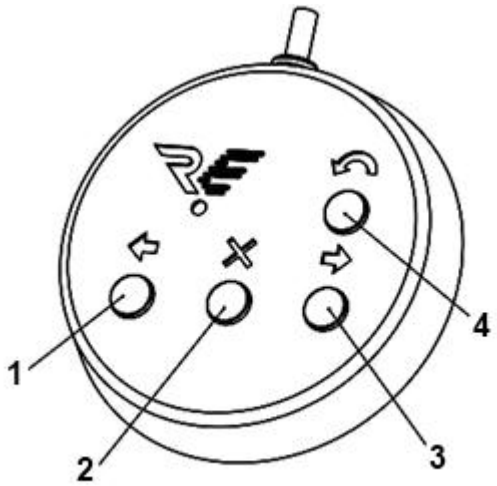

1 – left; 2 - stop; 3 – right; 4 – anti-panic

Figure 4 – Appearance of control panel

2.3 Product operation

2.3.1 Product's operating modes

Product can operate in several modes. Desired mode can be enabled using CP or contactless access card. Operating modes indicated on the turnstile stands by red and green LEDs for permission and prohibition of passage.

2.3.2 Controlling the product using control panel

Figure 4 – Over each CP button, there is LED indicator which displays operation mode of the turnstile.

STOP mode

STOP mode is set when the turnstile is turned on. The turnstile flaps are closed. Entering STOP mode from another mode is performed using button 2, while LED indicator over button 2lights up red.

In this mode, it is forbidden to pass in both directions, and indicator on the stands lights in red. Readers background light is red.

One-time passage mode

Button 1 (3) enables one-tine passage mode to the left (right). When this mode is enabled, one pass to the left (right) will be allowed, followed by entering the ‘Stop’ mode.

On the CP, LED indicator over the button, located on the side where passing is allowed, lights green, and lights red over button 2. Module stands on the side where passing is allowed will light green. The reader background light will be green on the side where passing is allowed.

If a pass has not been completed within 5 seconds, the product automatically enters the ‘Stop’ mode.

Free passage mode

To enter this mode, press and hold button 1, then press button 3 and release both buttons. In this mode, passes in both directions are allowed unlimited number of times.

Module stands on both sides will light green. At that, the readers will light green on both sides.

On CP, LED indicators over buttons 1 and 3 light green.

Anti-panic mode

Entering this mode is possible from any mode by pressing button 4. In this mode, the turnstile flaps will open towards the exit of the facility.

Module stands on both sides will blink green. At that, background light of the reader will blink, also on both sides.

LED indicator of control panel over button 4 will light yellow.

Emergency manual unlock mode

The turnstile has a manual unlocking mode for turnstile flaps (in case of power failure).

To unlock the flap:

1) Remove container from inside of the turnstile stand.
2) Press with finger, through unlock hole, the lever which moves the unlocking lever of the flap (Figure 1-5, located at the bottom of the stand, to the right behind the turnstile card collector container).
3) Open the flap manually in the desired direction.

2.3.3 Controlling the product using card collector

When power is turned on, standby mode is set and reader background light on the indication panel is red.

Entering another mode is performed upon provision of a contactless access card.

Passing with permanent user card

Upon presentation of an allowed permanent visitor card (it suffices to lay the card onto the reader), the card collector unlocks the turnstile for the time set by ACS controller (depending on the operating mode; 5 seconds – in pulse mode).

Other cards will not be accepted during the specified time interval, and the card collector will light green.

If the pass has been completed or after the specified time interval has expired, the card collector goes to standby mode and can accept the next card.

Module stands on the side where passing is allowed will light green.Module stands on the side where passing is allowed will light green.

Passing with guest card

Guest card should be inserted all the way into the slot, otherwise it will be ignored. If an allowed card is presented, the card collector withdraws it, and then unlocks the turnstile for 5 seconds.

Module stands on the side where passing is allowed will light green.

To allow access, a signal should come from the controller to the card collector not later than two seconds after inserting the card in the card collector.

Collector is full

When the collector is full, the card collector stops accepting guest cards and emits 4 short beeps with an interval of ~4 seconds. Beeps last 3 minutes.

Access with permanent visitors cards ais performed normally. To switch the card collector to standard operating mode, remove the access cards from the collector (sub-section 1.3.3).

Emergency mode

During card collector operation, various unforeseen situations may occur in which a card or a foreign object is clamped by the card collector's shutter.

To eliminate such situations, emergency mode is used:

1) open the card collector container using a key (Figure 3).
2) remove the container;
3) press and hold BUT1 button on the card collector board (Figure 5). When the button is pressed, the card collector shutter is forced open and a continuous beep sounds;
4) remove an object which interferes with normal operation of the system;
5) release BUT1 button, put the container back in place, and close it using the key.

Figure 5 – Appearance of the card collector board.

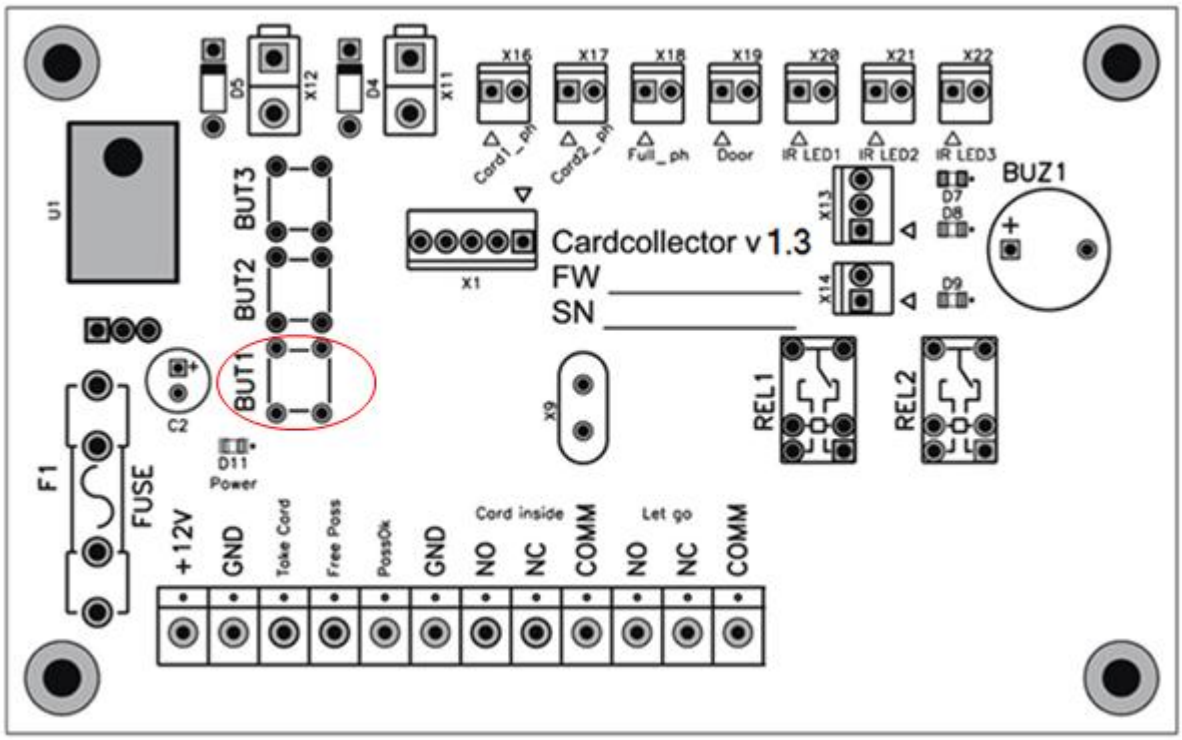

Figure 5 – Appearance of the card collector board

2.4 Actions in extreme conditions

To open passageway in emergency situation, use the ANTI-PANIC mode: in this mode, the product flaps will be open and passageway will be free.

ATTENTION: WHEN OPERATING THE PRODUCT REMEMBER THAT, IN CASE OF SHORT CIRCUIT, INSULATION BREAKDOWN AND SPARKING, ELECTRIC CIRCUIT CAN BE A SOURCE OF FIRE DANGER.

If a fire occurs, external power supply should be switched off. Fire which occurred in the product, wiring and cables should be extinguished using powder extinguishers.

2.5 Product calibration

Calibration should be performed if the turnstile is not operating normally. There are two ways to calibrate a turnstile.

2.5.1 Calibration using control panel:

1) De-energize the turnstile using the switch on the power supply unit.
   Using levers in the turnstile stands, set the turnstile flaps in barrier position.
2) turn on power, LEDs on CP first all light up and go out except for button (2);
3) press the button (2) for short time, button (4) will light up, press for short time and release button (4).
   These operations should be performed before all the LEDs on CP light up.
4) the turnstile flaps will start moving, they will pass all possible positions and stop in the barrier state.

The turnstile is calibrated. After calibration, connect the turnstile with the system and check its operation.

If calibration was not performed correctly, try to calibrate beginning from any open position instead of closed one.

3 MAINTENANCE

3.1 General Provisions

Maintenance (hereinafter referred to as MNT) of the product should be carried out in accordance with this Operation Manual.

3.1.1 To maintain performance and ensure estimated service life of the product during operation, it is necessary to periodically perform MNT of the product, including performing MNT during warranty period.

3.1.2 Scheduled maintenance should be perform 1 time in 6 months. If a fault occurs, maintenance should be performed immediately after troubleshooting.

3.1.3 Maintenance is recommended to be performed by two persons who are qualified mechanical and electromechanical specialists (or electricians), at least category 3, and who have studied this Operation Manual.

3.2 Safety precautions

When performing maintenance, safety measures should be observed. Maintenance should be performed by specially trained technical personnel.

DO NOT:

TO PERFORM WORK WHEN THE TURNSTILE POWER IS ON. FAILURE TO COMPLY WITH THIS SAFETY REQUIREMENTS CAN RESULT IN DEATH AND DAMAGE TO HEALTH, COMPLETE OR PARTIAL LOSS OF PERFORMANCE OF THE PRODUCT AND/OR AUXILIARY EQUIPMENT.

REMOVE MOTHERBOARD FROM ITS MOUNTS. OTHERWISE, MANUFACTURER WILL TERMINATE PRODUCT WARRANTY.

ATTENTION: IT IS NOT RECOMMENDED TO ADJUST SOLENOIDS' STROKE LIMITERS, HALL SENSOR BRACKET, OR TO ADJUST TENSION OF THE SPRINGS. THESE ASSEMBLIES ARE FACTORY-ADJUSTED. FAILURE TO COMPLY WITH THESE ADJUSTMENTS MAY CAUSE MALFUNCTION OF ENTIRE ELECTROMECHANICAL SYSTEM.

3.3 Product maintenance procedure

Maintenance includes the following scope of work:

1) visual inspection of the product condition;
2) partial disassembly of the turnstile, cleaning supporting frame;
3) checking fastening parts and assemblies of the turnstile;
4) lubrication of wear-prone parts of the actuating device and locking mechanisms;
5) installing dismantled parts to their place;
6) general check of the turnstile operation.

3.4 Visual inspection of the product

3.4.1 Visually inspect the product. There should not be visible damage on the product.

3.5 Partial disassembly of the product

To get access to all necessary assemblies of the turnstile, the latter should be partially disassembled.

3.5.1 Turn off the turnstile's power supply and disconnect it from power network.

To get access to the necessary assemblies of the turnstile, remove base cover by unscrewing M4 screws (Figure 6 – 2).

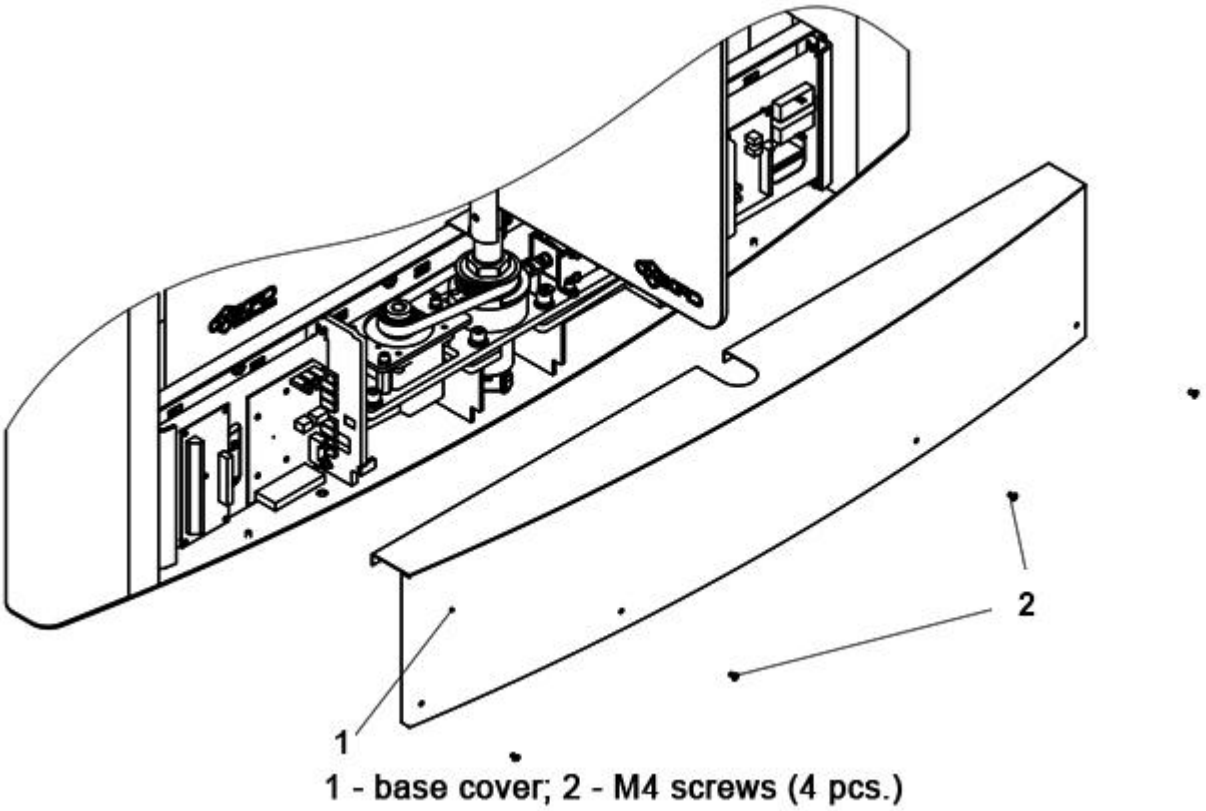

Figure 6 – Dismantling base cover of the product

3.6 Checking the product components

3.6.1 Clean load-bearing frame from dirt.

3.6.2 Check that all cables are securely attached.

3.6.3 Check and, if necessary, tighten threaded connections of fasteners of the turnstile assemblies:

1) fastener that secures the turnstile mechanism body to the base;
2) fasteners of blocking flaps on the turnstile brackets;
3) fastener of the locking screw on the lower flap bracket (Figure 7 – 1).

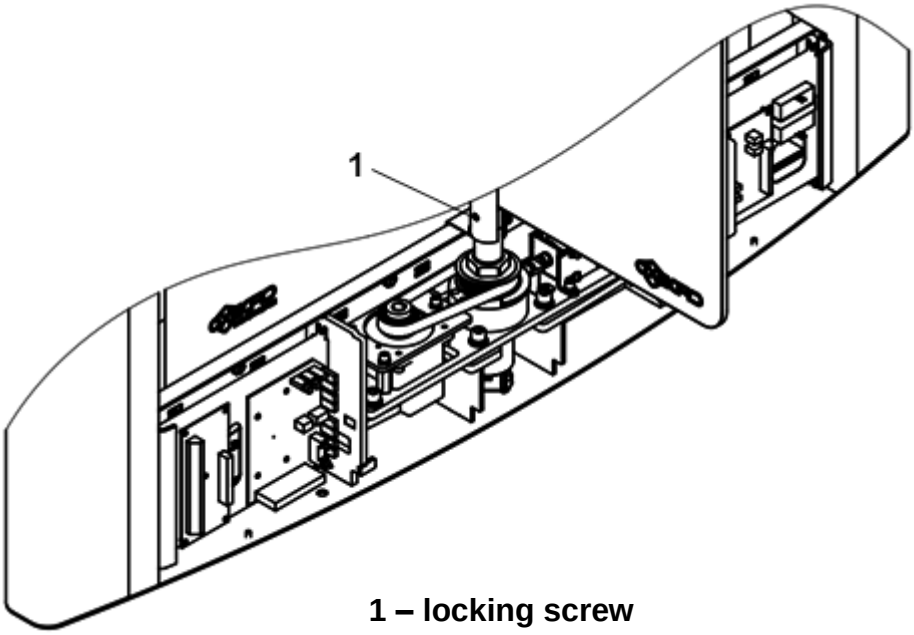

Figure 7 – Locking screw fastener

3.6.4 Check condition and tension of gear belt (Figure 8 – 2).

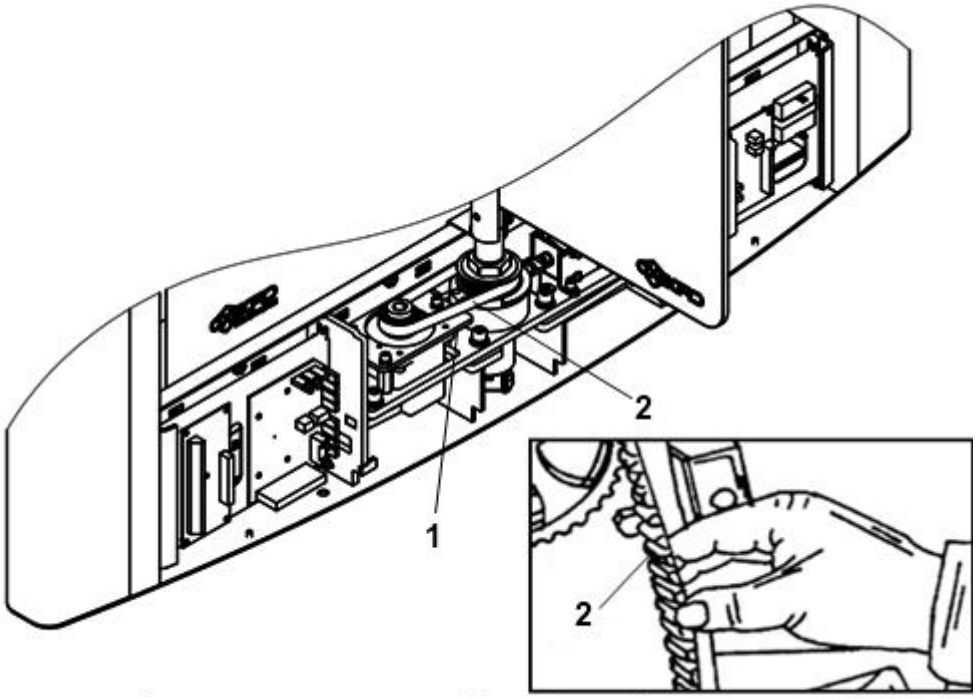

1 – mechanism case; 2 - gear belt

Figure 8 – Gear belt of the turnstile mechanism

When the belt is properly tensioned, it should be possible to rotate it by angle of 450 with fingers (1.5-2.0 kgf/15-20 N).

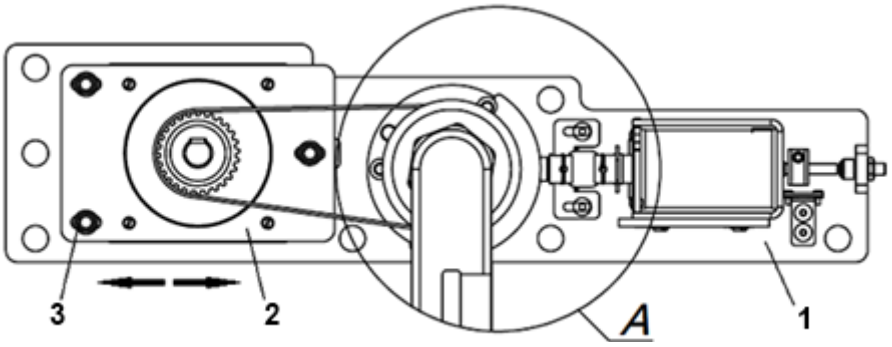

1 – mechanism case; 2 - motor support; 3 - M6 screw

Figure 9 – Gear belt tensioning

FigureFigure 9 – The belt tension can be changed by shifting the motor support to the right/left.

3.7 Lubricating moving parts of the product mechanism

Lube with machine oil, 5W-20 viscosity class, 2-3 drops per moving assembly.

3.7.1 Figure 10 – View A: lubricate clevis and retainer between locker unit and solenoid.

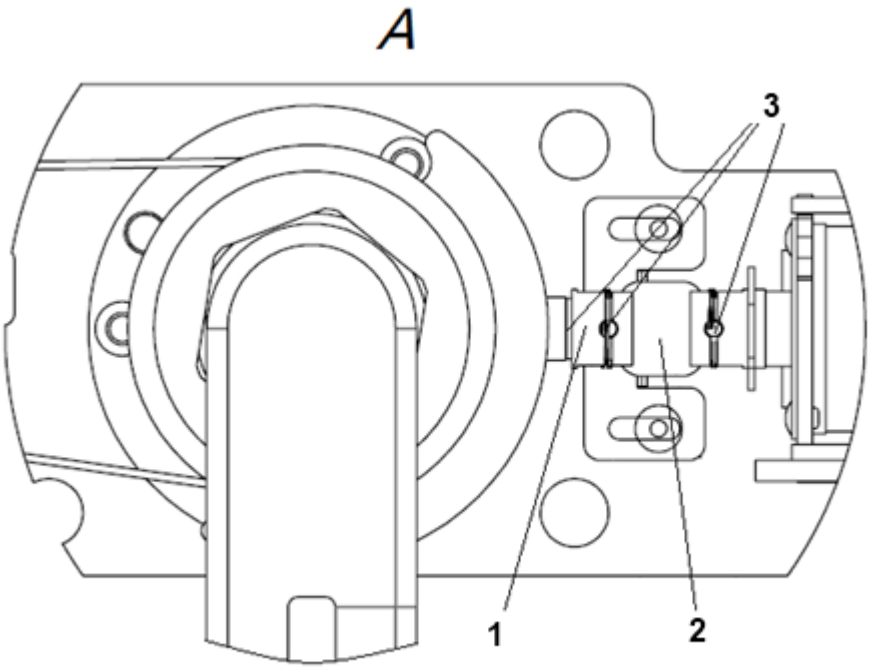

1 – stopper; 2 - clevis; 3 - 2-3 drops of oil

Figure 10 – Turnstile mechanism housing

3.8 Product assembly and testing

To assemble the product, perform disassembly operation in reverse order:

1) install cover to the turnstile base;
2) turn up the turnstile power;
3) perform a health check by performing several test passes and switching to the 'Anti-panic' mode.

If extraneous noise and any violations of operating modes are absent, the turnstile is ready for operation.

If any defects in the product components are found during MNT, we recommend to contact service department for advice.

List of addresses of official distributors and service centers is given in Appendix A and also is available on website: www.oxgard.ru

If it is necessary to repair damaged painted surfaces, use powder paint identical to the damaged one (RAL9005) in accordance with the paint instructions for application.

4 ROUTINE REPAIRS

4.1 Routine repairs of the product

No routine repairs are provided for the product. If faults listed in Table 6 occur, take the following actions.

Table 6 – Typical turnstile malfunctions

Malfunction	Action
PSU is connected, but the turnstile does not work	Check if the cables are connected correctly. Check fuse on cross-board.
CP doesn't work	Check if the CP is connected correctly. If +12 and GND terminals are connected correctly, swap CL and CH terminals.

If any other problems occur, contact service department.

4.2 Routine repairs of the product components

Routine repairs of the product components shall be carried out by replacing faulty parts with known good ones. If the card collector module has malfunctions listed in Table 7, take the following actions.

Table 7 – Typical malfunctions of the card collector module

Problem	Solution
PSU is connected, but the card collector does not work	Check if the cables are connected correctly. Check the fuse on the card collector board.
Card collector emits 5 beeps	<u>A card or a foreign object is left in the card collector's inlet slot.</u> Perform actions described for "Emergency mode" in subparagraph 2.3.3.
	<u>Upper optocoupler failed</u> Check connector voltage *(without removing the connectors, with BUT1 button pressed):* 1) IR LED1 (Vtyp=1.2 V): - if V = 5 V – LED or cable failed; 2) Card1_ph (Vtyp=0.1V; Vmax=2.5V): - if V ≤ 2.5 V – everything OK; - if V> 2.5 V – misalignment or malfunction of LED and phototransistor; - if V = 5 V - phototransistor or cable failed.

If such replacement is impossible or there are no known good components available for the product, a proprietary repair method should be used.

4.3 Malfunctions during warranty period

If a malfunction occurred during warranty period (Logbook VZR.245500.010 (LB)), please send a claim to the manufacturer.

To do this:

1) prepare a technically substantiated Claim Report;
2) make extracts from FO section "Repair".
3) make extracts from FO section "Preservation".

5 STORAGE

The product should be stored in dry (without moisture condensation) heated rooms at a temperature of +1 to + 40°C. The storage room should not contain acid, alkali, or corrosive gases.

The product shall be permitted to be stored in its original package for a short time, no more than for 3 days, in dry unheated rooms, enclosed transport bodies.

After storage in unheated rooms, before commissioning, the turnstile should be kept in a room with normal climatic conditions for 12 hours.

6 TRANSPORTATION

The product in the original package can be transported without limiting the range by air, closed motor road and rail transport provided it is protected against direct exposure to precipitation and dust.

When transporting and storing products on Euro pallets, it is allowed to stack boxes in 2 rows.

Loading and unloading operations should be carried out in compliance with safety regulations.

7 UTILIZATION

Upon expiry of its service life, the product should be disposed of along with its components.

Examples of such disposal can be disassembly (dismantling) of the product and sorting its components into groups of similar parts, converting the product into a learning aid or using it for purposes other than intended use.

APPENDIX A — DISTRIBUTORS AND SERVICE CENTERS

Lists of official distributors and service centers are given in Tables 8-9 and are constantly updated. The latest information is available at website www.oxgard.ru.

Table 8 – Distributors and service centers in Russia

No.	Company	Contact details	Status
1	Eliks trading house	107023, Moscow, 3, M. Semyonovskaya str., (Elektrozavodskaya metro station) 7(495)725–66–80 www.elics.ru, elics@elics.ru	Distributor Service center Warehouse
2	OOO Luis	125040, Moscow, Center, 1st Street Yamskogo Polya, 28 7(495)637–63–17 , 7(495)280–77–50 www.luis.ru luis@luis.ru	Distributor Warehouse
3	OOO Luis	192029, Saint Petersburg, Obukhovskoy Oborony Ave., 70, bld.3 7 (812) 331–40–41; www.luis.ru luis-spb@luis-spb.ru	Distributor Warehouse
4	OOO Luis	400081, Volgograd, Bureyskaya str., 7 7 (8442) 43–97–98 www.luis.ru info@luis-don.ru	Distributor Warehouse
5	OOO Luis	620100, Yekaterinburg, ul. Sibirsky trakt, 12, p. 6 7 (343) 298–20–28 www.luis.ru info@luis-ural.ru	Distributor Warehouse
6	OOO Luis	350051, Krasnodar, Dalnaya str., 2 7 (861) 273–99–03 www.luis.ru info@luis-don.ru	Distributor Warehouse
7	OOO Luis	Republic of Tatarstan, 420059, Kazan, Orenburg tract, 128, building 1 7 (843) 204–22–33 www.luis.ru luis@luis.ru	Distributor Warehouse
8	OOO Luis	603086, Nizhny Novgorod, Manufakturnaya str., 14, room 1 7 (831) 214 –71–17 www.luis.ru luis@luis.ru	Distributor Warehouse

No.	Company	Contact details	Status
9	OOO Luis	630007, Novosibirsk, Fabrichnaya str., 10 7 (383) 285–33–77 www.luis.ru luis@luis.ru	Distributor Warehouse
10	OOO Luis	614064 Perm, Chkalov str., 7a 7 (342) 206–07–47 www.luis.ru luis@luis.ru	Distributor Warehouse
11	OOO Luis	344029, Rostov-on-don, Menzhinsky str., 4 7 (863) 261–82–10 www.luis.ru info@luis-don.ru	Distributor Warehouse
12	OOO Luis	443028, Samara, 18 km of Moscow highway 7 (846) 203–04–24 www.luis.ru samara@luis.ru	Distributor Warehouse
13	OOO Luis	625048, Tyumen, Ervye str., 9 7 (3452) 48–95–20 7 (3452)48–95–40 7 (3452)48–95–35 www.luis.ru samara@luis.ru	Distributor Warehouse
14	OOO Luis	454090, Chelyabinsk, Lenin Av. 35 7 (351) 220–00–72 www.luis.ru luis@luis.ru	Distributor Warehouse
15	Layta trading house	410056, Saratov, Ulyanovskaya str., 17A 7 (8452) 392–057, 7 (8452) 735–575 7 (8452) 524–586 www.layta.ru info@layta.ru	Dealer
16	Layta trading house	355000, Stavropol, Pirogova str. 20 A 7 (8652) 550–111 7(8652) 551–529 7 (8652) 552–311 7 (8652) 552–411 7 (8652) 553–211 www.layta.ru info@layta.ru	Dealer
17	Bezopasnost	Moscow, 12-th Parkovaya str., 5 7(495)150-10-71 (multi-channel) sales@podkontrolem.ru www.podcontrolem.ru	Dealer Service center
18	Pocketkey	123290, Moscow, Prichalny driveway, 8, building 1, room 502 7(495) 107-09-10 hello@pocketkey.ru www.pocketkey.ru	Dealer
19	Revelin LLC	Professor Popov str., 4 7(812) 327-50-32 ravelin@ravelinspb.ru, www.ravelinspb.ru	Dealer Service center
20	Corporate Business Systems	123181, Moscow, 33 Isakovsky str., bldg. 3 7(495) 234-68-51 www.cbs-group.ru sales@cbs-group.ru	Dealer Service center

No.	Company	Contact details	Status
21	Corporate Business Systems	344002, Rostov-on-don, Solyanoy spusk lane, 8-10, 34 7(495) 234-68-52 www.cbs-group.ru sales@cbs-group.ru	Dealer Service center
22	Inforser Group of companies (Unified System Technologies)	109428, Moscow, Ryazansky ave, 24, building 2 7(495)660 17 33 www.inforser.ru	Dealer Service center
23	Benar	Khabarovsk, Neftyanaya, 14 8 962 587 11 69 бенар.рф sales@khab-tech.ru	Dealer Service center
24	ATM	Saint Petersburg, Shosse Revolyutsii, 31 7 (812) 640-85-84 7 (812) 655-62-05 www.atmcompany.ru info@atmcompany.ru	Dealer
25	CJSC Center for Security Systems	195197, Saint Petersburg, Polyustrovsky Ave., 32 Lit. K, office 201 7 (812) 240-31-00 market@cesb.ru ,http://www.cesb.ru/	Dealer
26	OOO SMNP-3	Magadan, Gorkogo str. 8 7 (41322)307 47 fuks@smnp-3.ru	Dealer Service center
27	IT-solutions for business	236009, Kaliningrad, Krasnokamennaya str., 42 7 (4012) 33-79-18 7 (4012) 76-79-18 it@it-sb.ru	Dealer
28	Intellectual systems	394006, Voronezh Chelyuskintsev, 145 7 (473) 250-20-01 inbox@int-sys.ru	Dealer
29	Intellectual systems	398026, Lipetsk region, Lipetsk, Zhelyabova str., 2, office 307. 7 (4742) 51-58-77 inbox@int-sys.ru	Dealer
30	Layta trading house	111141, Moscow, 3rd Proezd Perova Polya, 8 (business center "Perovo Polye", 3rd floor), m. Perovo 7(495) 708-42-13 www.tinko.ru tinko@tinko.ru	Sub-dealer
31	OOO Satro-Paladin	129515, Moscow, Kondratyuka str., 9, bld. 1 7 (831) 272–55–75 7 (831)412–93–11 www.satro-paladin.com dir@nn.satro-paladin.com	Dealer
32	OOO Satro-Paladin	603070, Nizhny Novgorod, Meshchersky ave, 7, bld. 3, office 10 7 (831) 272–55–75 7 (831)412–93–11 www.satro-paladin.com dir@nn.satro-paladin.com	Dealer

No.	Company	Contact details	Status
33	OOO Satro-Paladin	400009, Volgograd, Tarifnaya str., 13 7 (8442) 56–49–94 7 (8442)71–08–01 7 (8442)76–56–29 www.satro-paladin.com dir@nn.satro-paladin.com	Dealer
34	OOO Videoglaz Center	105187, Moscow, Volnaya str., 35, p. 19 7–(495)–280–71–70 www.videoglaz.ru zakaz@videoglaz.ru	Dealer
35	Videoglaz	Saint Petersburg, Ligovsky Prospekt, 266B 3rd floor 7(812)245-28-24 www.videoglaz.ru zakaz@videoglaz.ru	Dealer
36	OOO Birzha	109052, Moscow, Nizhegorodskaya str., 29-33, bld. 32, office 402 7 (495) 229-45-15 www.global-id.ru info@global-id.ru	Dealer
37	OOO STELS	Amur region, Blagoveshchensk, Artilleriyskaya str., 17 7 (4162) 777–888 7 (4162) 525–777 7 (4162) 519–777 www.global-id.ru ctb@stels-amur.ru sale@stels-amur.ru	Dealer Service center Warehouse
37	"Complex security systems" Group of companies	Vladikavkaz, Kolka Kesaeva str., 3 7 (8672) 40–35–4 7 (8672)40–58–94 www.ksb-rso.ru ksb-rso@mail.ru	Dealer Service center
39	OOO Profbezopasnost	Sochi, Roses str., 115/1 7 (800) 700-51-90 www.profbez.pro info@profbez.pro sale@profbez.pro	Dealer Service center
40	OOO APL	Saint Petersburg, 9-th Sovetskaya str., 4, office 312 7 (812) 401 63 34, 7 921 55 111 01 www.aplspb.ru info@aplspb.ru	Dealer Service center
41	ALPRO	Address: 194100, Saint Petersburg, Bolshoy Sampsonievsky Ave., 70, lit. "V", office 3N, POLAR Business Center 7 (812) 702-17-52 www.alpro.ru sales@alpro.ru	Dealer
42	OOO InfoTekh	Saint Petersburg, Moskovsky ave., 103/3 7 (812) 327 95 10 7 (812)327 95 06 www.infotec.ru contact@infotec.ru	Dealer
43	OOO ForTreid	196105, Saint Petersburg, Lyubotinsky ave., 5 LIT "B" office 310 8 (812) 309-58-53 www.fteg.ru 4trade@fteg.ru	Dealer

No.	Company	Contact details	Status
44	OOO “Grumant corporation”	630123, Novosibirsk, Krasnogorskaya str. 27A 8 (383) 210–352–353 www.grumant.ru info@grumant.ru	Dealer
45	OOO “Grumant corporation”	107553, Moscow, 1st Pugachevskaya str., 25 office 118 7 (495)783-29-60 7 (499)161-06-91. www.grumant.ru mf@grumant.ru	Dealer
46	OOO “Grumant corporation”	299038, Crimea, Sevastopol, Kolobova str., 35 / 4 7 (978) 744 38-86 7 (978) 744-38-59 www.grumant.ru krim1@grumant.ru krim2@grumant.ru	Dealer
47	OOO ModusTreid	644046, Omsk, Mayakovsky str., 14 7 (3812) 51-00-93 7 (3812) 51-07-29	Dealer

Table 9 – Foreign distributors and service centers

No.	Company	Contact details	Status
1	VZR System OU	Tulika tn 19, Tallinn 372 5844 4957 8 921 996 2746 www.vzrsystem.ee info@vzrsystem.ee	Distributor Warehouse
2	VZR System OU	Hofer Str. 39 95183 Feilitzsch-Zedtwitz Deutschland 372 5844 4957 8 921 996 2746 49 9281 140 11 65 49 928 1 140 11 16 www.multitrans.net ksemjonow@multitrans.net ue@multitrans.net	Distributor Warehouse
3	ТОО "ТД INTANT"	Republic of Kazakhstan, Almaty, Muratbayev str., 61 7 (727) 225–35–35 7 (727) 220–95–31 www. security.intant.kz intant@intant.net	Dealer Warehouse
4	«A+A Security» MMC	AZ1110, Azerbaijan, Baku city, Akhmad Bay Aga oglu str. 24B 8 (+994 12) 496-00-56 www.aasecurity.az info@aplusa-security.com	Dealer
5	Victiana S.R.L. (Videosecurity Moldova)	The Republic of Moldova, Chisinau, Hajdeu str., 66/3 373 (22) 876-000 373 (22) 876-001 www.videosecurity.md info@videosecurity.md	Dealer
6	Unitary enterprise "Security and Safety Systems"	Minsk, Petra Glebki str., 1 375 (17) 390-66-66 (multi-channel) Mob.: +375 (33) 340-11-11 (MTS) www.sob.by info@sob.by	Dealer Service center
7	OÜ Almasel	Mustamäe tee 102-106 Tallinn Harjumaa 12917 Tel +372 59192909 info@almasel.com	Service center

APPENDIX B - POSSIBLE TURNSTILE MODULES

Figure 11 – Possible to use modules of the turnstile.

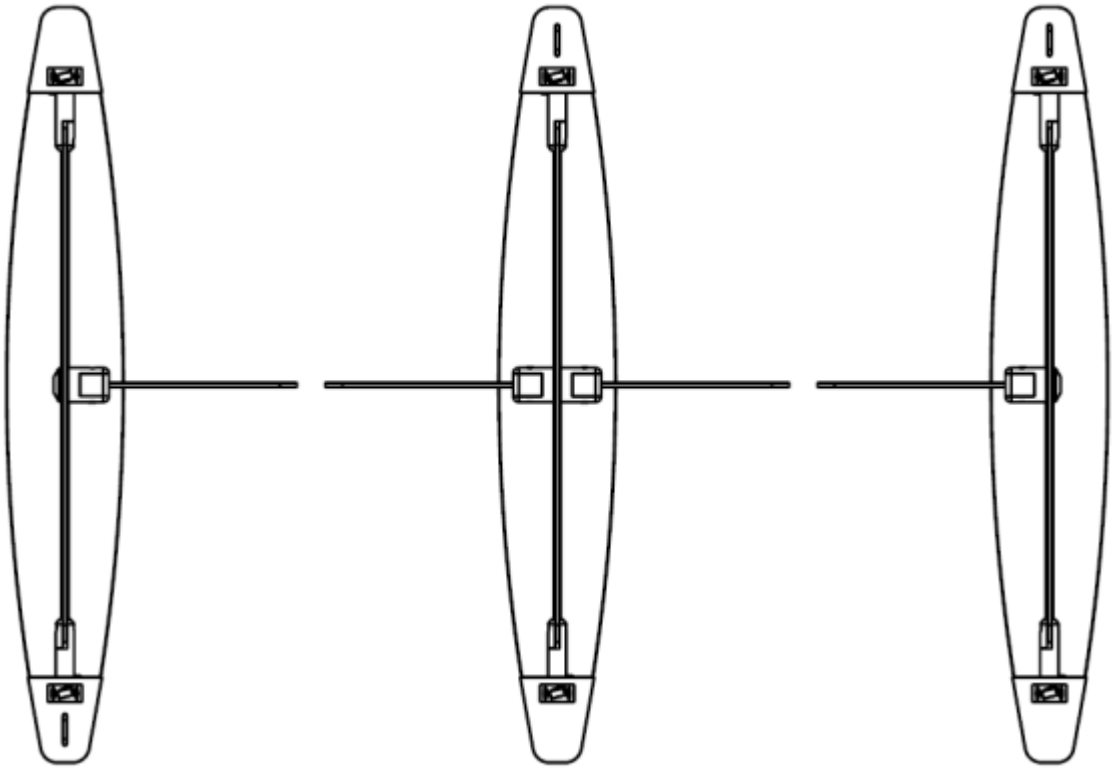

Outmost left module **Central module** **Outmost right module**

Figure 11 – Possible turnstile modules

Outermost (one-way) left module of the turnstile (1 glass wall + 1 motorized glass leaf).

Central (two-way) left module of the turnstile (1 glass wall + 2 motorized glass leaf).

Outermost (one-way) right module of the turnstile (1 glass wall + 1 motorized glass leaf).

ABBREVIATIONS

The following abbreviations are used in this document:

LB — Logbook;

OM — Operation Manual;

IM — Installation Manual;

PSU - power supply unit;

CP - control panel;

ACS - access control system;

TO — maintenance;

AD -actuating device (turnstile).

PRODUCT IS CERTIFIED

Voltage: 12V DC
Current: 5A

Importer: VZR System OU
Tulika 19, Tallinn 10613
+ 372 5844 4957
e-mail:
info@vzrsystem.ee
www.vzrsystem.ee

Manufacturer:
«Vozrozhdenie»
66, Sofiyskaya str. 192289
St. Petersburg, Russia
Tel. 8(812)706-95-31
e-mail: sales@oxgard.com
www.oxgard.com

ISO 9001:2008

RoHS Compliant

VOZROZHDENIE LLC

192289 Saint-Petersburg

66, Sofiiskaya st.

Telephone/Fax +7 (812) 366 15 94

www.oxgard.com

info@oxgard.com